Donaldson
FILTRATION SOLUTIONS

Inlet Barrier Filter System for Robinson R66 Turbine Helicopters

TAKING FILTRATION TO NEW HEIGHTS

Dust, sand and debris routinely attack your turbine engines, hampering efficiency and impacting reliability.

Installing an Inlet Barrier Filter (IBF) system is the most effective way to protect your engine and help meet established engine time between overhaul requirements.

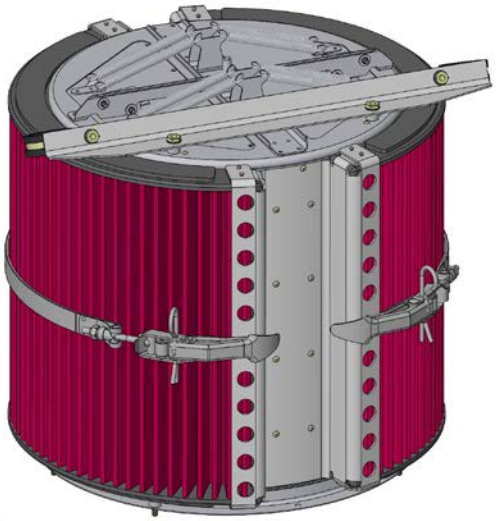

R66

Donaldson's IBF system is available factory direct and delivers:

+ More power available than alternate sand filter options
+ Longer engine life due to elimination of erosion
+ Reduced engine maintenance cost
+ Meet or exceed established engine TBO requirements
+ Retrofittable for current R66 rotorcrafts

Product Overview

Features	R66 Part number 146000-101
Design Features	Delivered flat, this flexible filter curves upon installation for 320 degrees of coverage and exceptional drive shaft protection. The filter, which can be quickly installed in less than a day with two easy steps, replaces the existing R66 filter with Donaldson high-performance oiled media for superior IBF protection.
Filter Life (Service Cycles)	4,500 hours (15 cycles every 300 hours)
Emergency Bypass	The Donaldson IBF utilizes the existing bypass system.
Components	The IBF system incorporates a filter maintenance aid for on-condition monitoring while an aircraft is on the ground, enabling pre- and post-flight filter health assessment.
Performance	The filter is approved for installation worldwide.
Certificates (Call for Latest Updates)	Certified and available for factory installation.

Donaldson
FILTRATION SOLUTIONS

donaldsonrotorcraft.com
donaldson.com

Donaldson Company, Inc.
Aerospace & Defense Group

17891 Chesterfield Airport Road
Chesterfield, MO 63005

North America
aerospace.americas@donaldson.com
+877-314-9640

Europe
aerospace.emea@donaldson.com
+33 1 30 86 66 66

IMPORTANT NOTICE: Many factors beyond the control of Donaldson can affect the use and performance of Donaldson products in a particular application, including the conditions under which the product is used. Since these factors are uniquely within the user's knowledge and control, it is essential the user evaluate the products to determine whether the product is fit for the particular purpose and suitable for the user's application. All products, product specifications, availability and data are subject to change without notice, and may vary by region or country.

F112280 ENG (01/24) ©2024 Donaldson Company, Inc. All rights reserved. Donaldson Company, Inc. reserves the right to change or discontinue any model or specification at any time and without notice.